Decatur Bridge Feasibility Study

STP-51-7(109); CN 32395

Community Advisory Group (CAG) Meeting #1

January 18, 2024, 1:00 – 4:00 p.m.

U.S. Department of Transportation
Federal Highway Administration

NEBRASKA DEPARTMENT OF TRANSPORTATION

IOWA DOT

Thank you, CAG representatives!

- **Role of the CAG**
  - Provide insights and feedback
  - Share information with your networks, friends, neighbors
- **Selection of CAG Members**
  - Cross-section of local interests
- **Responsibility of CAG Members**
  - Actively participate in meetings
  - Allow all members an opportunity to speak
  - Be respectful of opposing views
- **Public Access to CAG Meetings**
  - Meeting materials and summaries posted to project website: **ndot.info/32395**

Today's Meeting Goals

- Share project overview and study goals
- Explain the study process and schedule
- Identify what are we missing?
- Gather information to build Purpose & Need
- Inform the development and evaluation of alignments
- Review draft community survey launching Feb. 1

AGENDA

CAG #1 Meeting

1:00 – 1:15 PM	Welcome & Introductions
1:15 – 1:45 PM	Project Overview & Existing Conditions
1:45 – 2:00 PM	Overview of the Small-group Discussions
2:00 – 2:15 PM	15-minute Break
2:15 – 3:00 PM	Small-group Discussions
3:00 – 3:30 PM	Groups Report Out & Discuss
3:30 – 4:00 PM	Online Survey Overview & Wrap Up

Project Overview & Existing Conditions

U.S. Department of Transportation
Federal Highway Administration

NEBRASKA
DEPARTMENT OF TRANSPORTATION

IOWA DOT

Project Description

- Identified as ***Decatur Bridge***, the proposed project would improve the Nebraska Highway 15 (N-51) / Iowa Highway 175 (IA-175) Missouri River crossing commonly referred to as the Decatur Bridge (S051 03644) in Burt County, Nebraska and Monona County, Iowa.
- The Decatur Bridge has been previously determined eligible for listing in the National Register of Historic Places (NRHP).
- Alternatives may include removal and replacement of the existing crossing or rehabilitation of the existing bridge.
- Will be prepared as a Federal-aid eligible project.

NEPA Process

- The National Environmental Policy Act (NEPA) is a Federal procedural law that establishes a national environmental policy. NEPA **provides a framework for environmental planning** and **decision-making** on projects that receive Federal funds or require Federal approvals.
- NEPA requires Federal agencies, when planning projects or issuing permits, to conduct environmental reviews to **consider the potential impacts on the environment** by their proposed actions.

Purpose & Need

- The statement of the project purpose and need is the **core component** of the NEPA document. It serves as the **benchmark against which project alternatives are evaluated.**
- Briefly and precisely **states the transportation problem** and the intended **project objective.**

Options Being Considered

1. “Do nothing”
   - No action other than regular maintenance
   - Bridge deteriorates until permanent closure is required
2. Rehabilitate the existing bridge
3. Replace the bridge in the same location
4. Replace the bridge at a different location

Project Phases

PRELIMINARY PLAN
NOT FINAL – SUBJECT TO CHANGE

PHASE 1 (We are here)
Preliminary Environmental Review & Concept Study

PHASE 3 (Sept. 2025)
Final Design

2024 | 2025 | 2026 | 2027 | 2028 | 2029

PHASE 2 (Sept. 2024)
Preliminary Design & NEPA Decision

CONSTRUCTION
Begin as early as fiscal year 2029, pending available funding

PRELIMINARY PLAN
NOT FINAL – SUBJECT TO CHANGE

Phase 1 Timeline

Preliminary Environmental Review & Concept Study

NTP
Suppl No. 2

OCTOBER
- Begin Agency Coordination
- Public Officials Email Notification
- CAG Invitations

(We are here)

JANUARY
- Public Officials Briefing
- CAG Meeting #1
- Launch Survey

FEBRUARY
- Draft Study Area
- Funding Strategy Memo

APRIL
- CAG Meeting #2

JUNE
- Public Information Meetings: IA & NE

JULY
- Public Involvement Report
- Draft Reports & Memos
- Confirm Study Area

SEPTEMBER
- Final Evaluation Report
- Bridge & Hydraulic Concept Report
- Action Plan

SEPT 2023 | OCT | NOV | DEC | JAN 2024 | FEB | MAR | APR | MAY | JUN | JUL | AUG | SEPT

ENV SURVEYS

ENV MEMOS

ENV SURVEYS (IADOT)

DATA COLLECTION & EVALUATION

ALIGNMENT EVALUATION

DOCUMENTATION

ALIGNMENT DEVELOPMENT / BRIDGE CONCEPT DESIGN / HYDRAULIC ANALYSIS

Next Steps

- Collect your input today
- Finalize and launch public survey – February 1
- Develop initial alignments
- CAG #2 meeting – April 2024
- Refine initial alignments
- Public meetings – June 2024

Existing Conditions

Existing Environmental Constraints

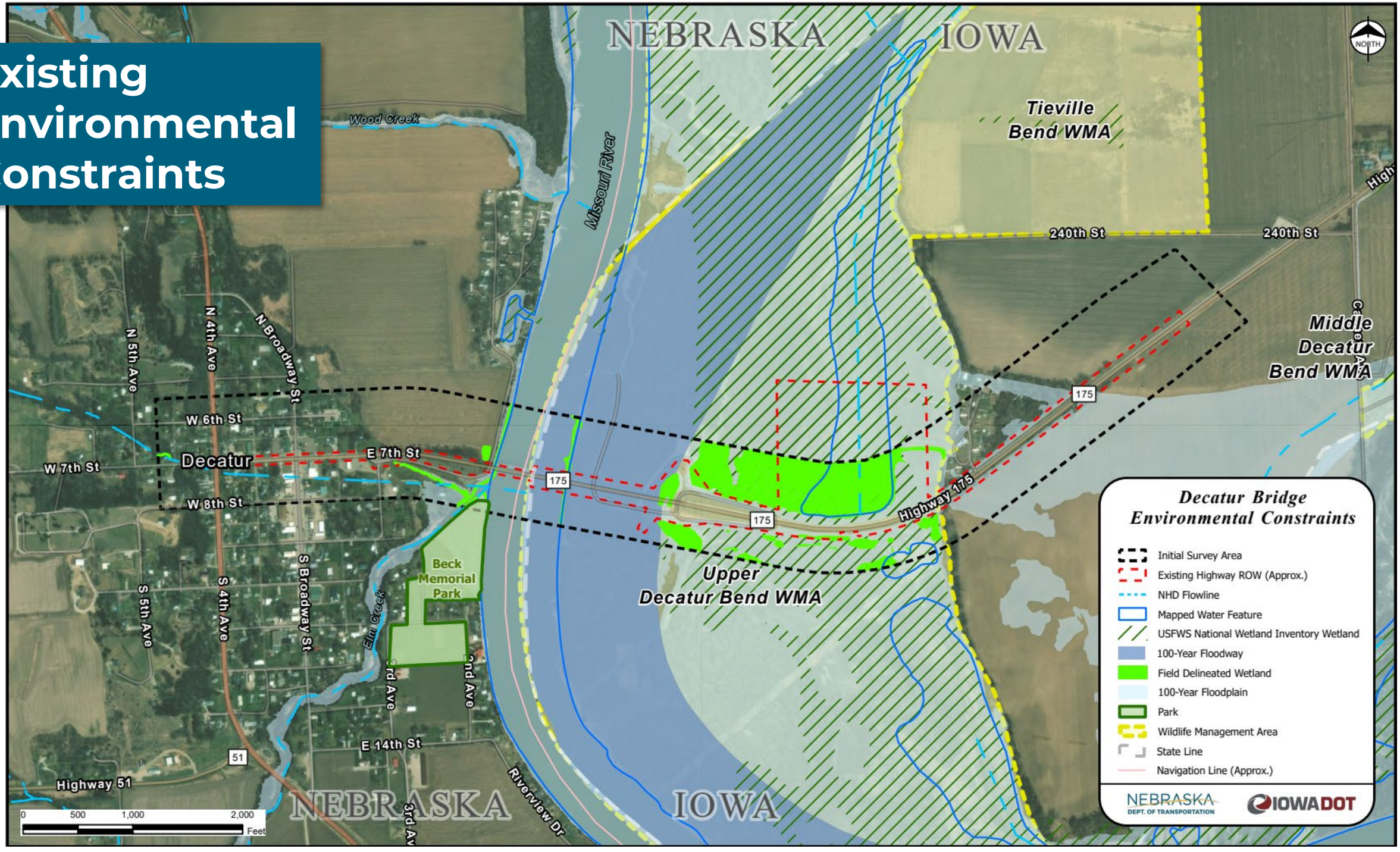

Existing Land Use

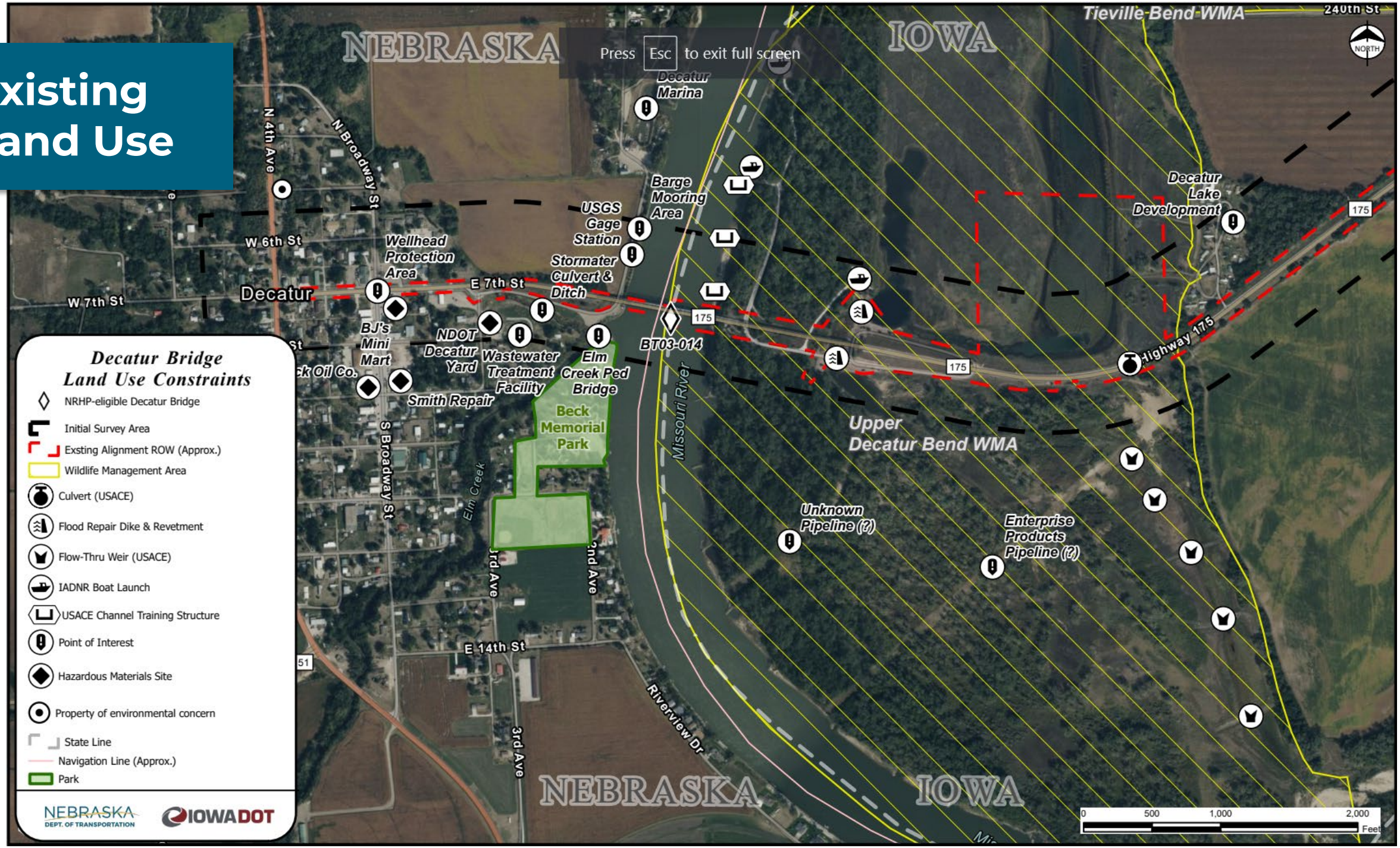

Bridge History

= Structural Repairs on Bridge

1951
Bridge main spans built

1956
Bridge complete & open to traffic

2013
Ownership transfer to NDOT

2017
Major repairs

1949
Burt Co. Bridge Commission formed

1967
Final Mainstem Dam built

2000
Steel Grid Deck installed

WE ARE HERE

1940 | 1950 | 1960 | 1970 | 1980 | 1990 | 2000 | 2010 | 2020 | 2030

1952 Flood

1955
Missouri River shifted by USACE; Gavins Point Dam

1997 Flood

2011 Flood
5-month bridge closure

2019 Flood

Existing Crossing Components

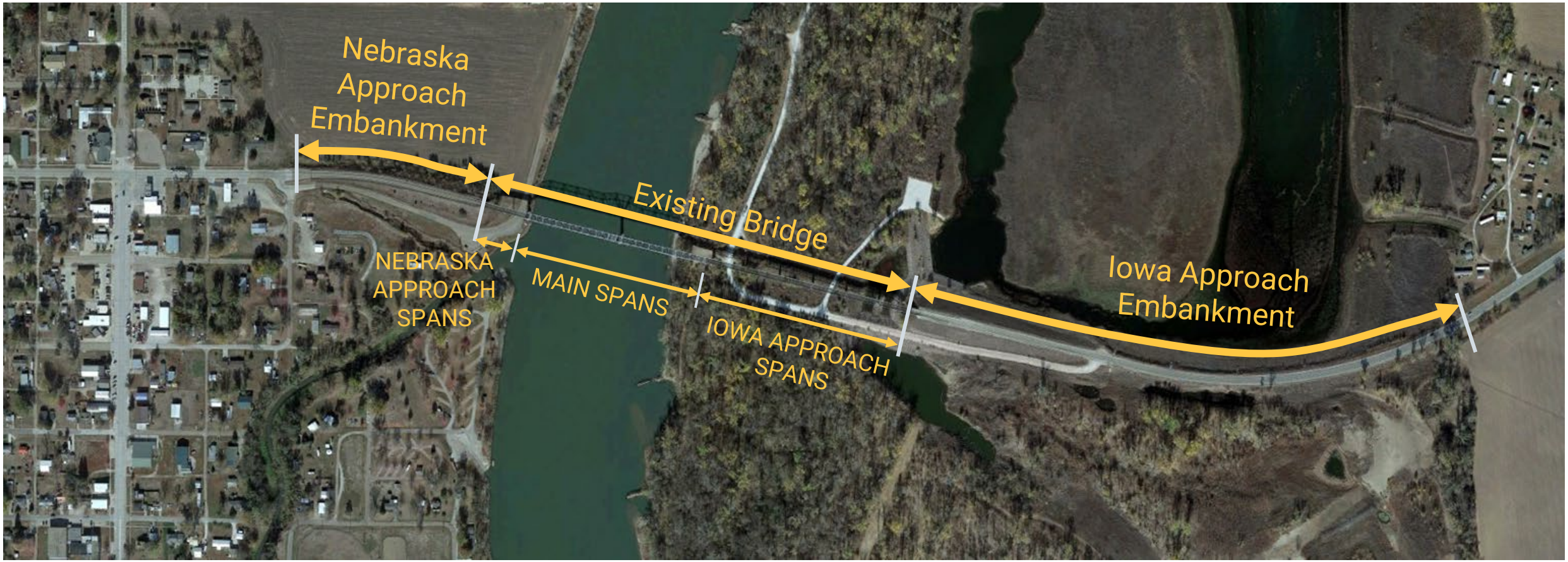

Existing Bridge Description

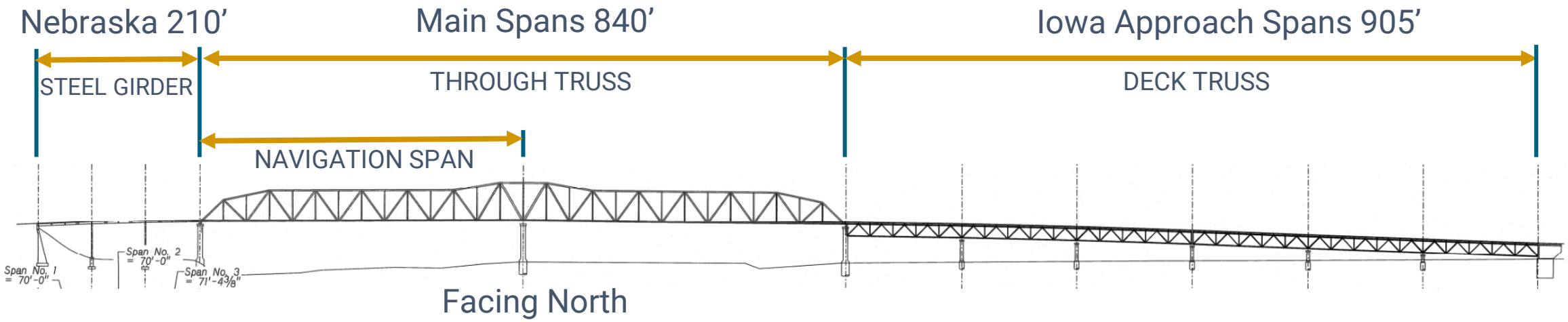

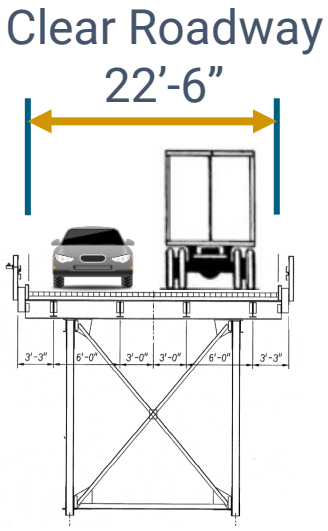

Existing Bridge Condition

Issue	Existing Condition	Notes
Bridge Age	73 years	Built in 1951
Repair Frequency	Structural repair projects performed 9 times since 1970	Ongoing annual maintenance
Structural Deficiencies	Identified during regular DOT inspections (every 2 years)	*Urgent*: Addressed by DOT immediately. *Non-urgent:* Scheduled for maintenance or repair. Due to age, new deficiencies have been identified with each inspection.
Roadway Width	22’-6” clear width 11’-3” lanes, no shoulders	*Current standard:* 36’-0” clear width (minimum) 12’-0” lanes, 6’-0” shoulders (minimum)
Load Posting	25 tons	*Current standard:* Legal loads
Scour (Erosion) Risk	2011 Flood: Erosion at east end resulted in 5-month bridge closure	Stabilization measures built by Iowa DOT. Overall hydraulic conditions that led to scour remain.

Overview of the Small-group Discussions

Group Facilitators

Michelle

Shari

Andrew

Brandon

Small-group Discussions

1:45 – 2:45 PM

Report Back & Discussion

Group Discussions
wrap up by 2:45 pm

Identify

What is missing?

Gather

Build foundation of the Purpose & Need

Inform

Development & Evaluation of Alignments

- Do Nothing
- Repair
- Replace

Community Survey Overview

Scheduled to launch February 1

U.S. Department of Transportation
Federal Highway Administration

NEBRASKA
DEPARTMENT OF TRANSPORTATION

IOWA DOT

Please provide your feedback!

Help shape the future of the Decatur Bridge!

There are two opportunities to engage. It only takes a few minutes to participate in the below activities.

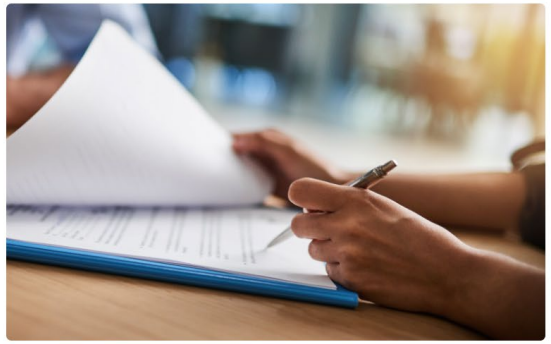

Take a quick survey

What issues do you have with the existing bridge? If a new crossing were built, how could it be improved? Could the bridge be moved to better serve the community? Share your thoughts with the team to help inform the study process.

Take The Survey

Drop pins on a map

Where do you travel in Burt and Monona counties? What local landmarks or locations are community assets? What should be considered? Share location-based details by dropping pins on a map and leave a comment.

Drop Pins On A Map

Decatur Project Website: **ndot.info/32395**

Use your phone camera to hover over the QR code then click to visit the webpage.

Your name

Decatur Simple Survey

How do you travel and why?

1. How often do you travel across the Decatur Bridge?

- ☐ Less than 6 times a year
- ☐ 6 to 12 times a year
- ☐ 1 to 4 times a month
- ☐ 4 or more times per week

2. What is the primary purpose of your trip? Select the top 3.

- ☐ Work
- ☐ School/Education/Daycare
- ☐ Healthcare
- ☐ Personal errands (groceries, salon/barber, veterinary care)
- ☐ Entertainment (Dining, shopping, etc.)
- ☐ Family/friends
- ☐ Other (describe)

3. How do you typically travel across the bridge? Select all that apply.

- ☐ Personal vehicle
- ☐ Carpool/Rideshare
- ☐ Public transit/On-demand
- ☐ Large truck or semi
- ☐ Farm equipment
- ☐ Other (describe)

Next Steps

- Collect your input today – please return handouts with notes
- Finalize and launch community survey – February 1
  - Help get the word out to your networks!
- Develop initial alignments
- CAG #2 meeting – April 2024
- Refine initial alignments
- Public meetings – June 2024

Thank you for being a part of this important community project.

U.S. Department of Transportation
Federal Highway Administration

NEBRASKA
DEPARTMENT OF TRANSPORTATION

IOWA DOT